HEATER, AIR CONDITIONER AND VENTILATION

Click on the applicable bookmark to selected the required model year

Vacuum Actuator Check <Diesel-powered Vehicles> 18

Idle-up Solenoid Valve Check <Diesel-powered Vehicles> 19

Lever Position Switch Check <Diesel-powered Vehicles (A/T)> 20

HEATER CONTROL ASSEMBLY AND A/C SWITCH 21

HEATER UNIT AND HEATER CORE* 24

BLOWER ASSEMBLY AND RESISTOR 26

EVAPORATOR <VEHICLES WITH A/C> 28

COMPRESSOR AND TENSION PULLEY* 30

CONDENSER AND CONDENSER FAN MOTOR 33

REFRIGERANT LINE* 35

ENGINE COOLANT TEMPERATURE SWITCH <Diesel-powered Vehicles> 37

IDLE-UP SYSTEM <Diesel-powered Vehicles> 39

LEVER POSITION SWITCH <Diesel-powered Vehicles (A/T)> 40

VENTILATORS* 41

GENERAL INFORMATION

55200010121

The heater system uses a two-way-flow full-air-mix

Caution
Do not heat R-134a above 40°C

In most instances, moderate heat is required to bring the pressure of the refrigerant in its container above the pressure of the system when charging or adding refrigerant.
A bucket or large pan of hot water not over 40°C is all the heat required for this purpose. Do not heat the refrigerant container with a blow torch or any other means that would raise temperature and pressure above this temperature. Do not weld or steam clean on or near the system components or refrigerant lines.

Caution
Keep R-134a containers upright when charging the system.

When metering R-134a into the refrigeration system keep the supply tank or cans in an upright position. If the refrigerant container is on its side or upside down, liquid refrigerant will enter the system and damage the compressor.

Caution
1. **The leak detector for R-134a should be used to check for refrigerant gas leaks.**
2. **Do not allow liquid refrigerant to touch bright metal.**

Refrigerant will tarnish bright metal and chrome surfaces, and in combination with moisture can severely corrode all metal surfaces.

SERVICE SPECIFICATIONS

55200030141

Items		Standard value
Idle speed r/min	4G6	750±100
	4D5	750±100
Idle up speed r/min		900±50
Resistor (for blower motor) <L.H. drive vehicles> Ω		LO: 2.21, ML: 0.97, MH: 0.35
Resistor (for blower motor) <R.H. drive vehicles> Ω		LO: 2.81, ML: 1.28, MH: 0.33
Air gap (Magnetic clutch) mm		0.3 – 0.6
Engine coolant temperature switch (for A/C cut-off) <4D5> C°	ON (continuity)	108 or less
	OFF (no continuity)	115 or more
Engine coolant temperature switch (for condenser fan) <4D5> C°	ON (continuity)	102 or more
	OFF (no continuity)	97 or less

LUBRICANTS

55200040137

Items	Specified lubricants	Quantity
Each connection of refrigerant line	ZXL100PG	As required
Compressor refrigerant unit lubricant mℓ	ZXL100PG	180

SEALANT

55200050048

Item	Specified sealant	Remark
Engine coolant temperature switch threaded part	3M Nut Locking Part No. 4171 or equivalent	Drying sealant

SPECIAL TOOL

55100060017

Tool	Number	Name	Use
	MB990784	Ornament remover	Meter bezel assembly removal

TROUBLESHOOTING

55200070150

TROUBLESHOOTING PROCEDURES

Trouble symptom	Problem cause	Remedy	Reference page
When the ignition switch is “ON”, the A/C does not operate.	A/C compressor relay is defective	Replace A/C compressor relay	55-16
	Magnetic clutch is defective	Replace the A/C compressor	55-6, 30
	Refrigerant leak or overfilling of refrigerant	Replenish the refrigerant, repair the leak or take out some of the refrigerant	55-6, 14
	Dual pressure switch is defective	Replace the dual pressure switch	55-7, 35
	A/C switch is defective	Replace the A/C switch	55-21, 23
	Blower switch is defective	Replace the blower switch	55-21, 23
	Thermostat is defective	Replace the Thermostat	55-29
	Engine coolant temperature switch (for A/C cut-off) is defective <Diesel-powered vehicles>	Replace the engine coolant temperature switch	55-37, 38
	Engine-ECU is defective <Petrol-powered vehicles>	Replace the engine-ECU	–
When the A/C is operating, temperature inside the passenger compartment doesn’t decrease (cool air is not emitted).	Refrigerant leak	Replenish the refrigerant and repair the leak	55-14
	Dual pressure switch is defective	Replace the dual pressure switch	55-7, 35
	Thermostat is defective	Replace the Thermostat	55-29

Trouble symptom	Problem cause	Remedy	Reference page
Blower fan and motor doesn't turn	Blower relay is defective	Replace the blower relay	55-15
	Blower fan and motor is defective	Replace the blower fan and motor	55-26, 27
	Blower resistor is defective	Replace the blower resistor	55-26, 27
	Blower switch is defective	Replace the blower switch	55-21, 23
Blower fan and motor doesn't stop turning.	Short circuit of the harness between the blower fan and motor and the blower switch	Repair the harness	–
	Blower switch is defective	Replace the blower switch	55-21, 23
When the A/C is operating condenser fan does not turn.	Condenser fan motor is defective	Replace the condenser fan motor	55-33, 34
	Condenser fan relay is defective	Replace the condenser fan relay	55-16

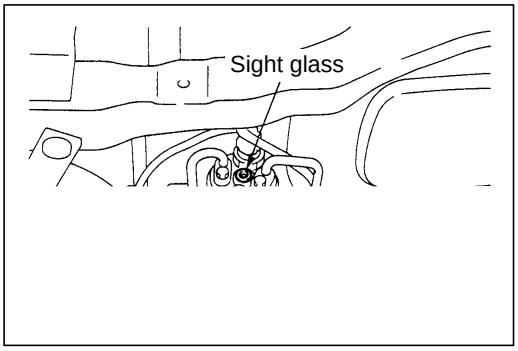

ON-VEHICLE SERVICE

55200840096

SIGHT GLASS REFRIGERANT LEVEL TEST

The sight glass is a refrigerant level indicator. To check the refrigerant level, clean the sight glass and start the vehicle engine. Push the A/C button to operate the compressor, place the blower switch to high and move the temperature control lever to max cool. After operating for a few minutes in this manner, check the sight glass.

1. If the sight glass is clear, the magnetic clutch is engaged, the compressor discharge line is warm and the compressor inlet line is cool; the system has a full charge.
2. If the sight glass is clear, the magnetic clutch is engaged and there is no significant temperature difference between compressor inlet and discharge lines; the system has lost some refrigerant.
3. If the sight glass shows foam or bubbles, the system could be low on charge. The system has to be recharged with refrigerant.

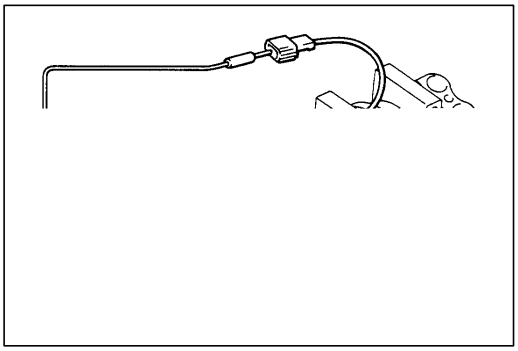

MAGNETIC CLUTCH TEST

55200850099

1. Disconnect the connector (1P) to the magnetic clutch.
2. Connect battery (+) voltage directly to the connector for the magnetic clutch.
3. If the magnetic clutch is normal, there will be “click”. If the pulley and armature do not make contact (‘click’), there is a malfunction.

RECEIVER DRIER TEST

55200860078

Operate the unit and check the piping temperature by touching the receiver drier outlet and inlet.
If there is a difference in the temperatures, the receiver drier is restricted.
Replace the receiver drier.

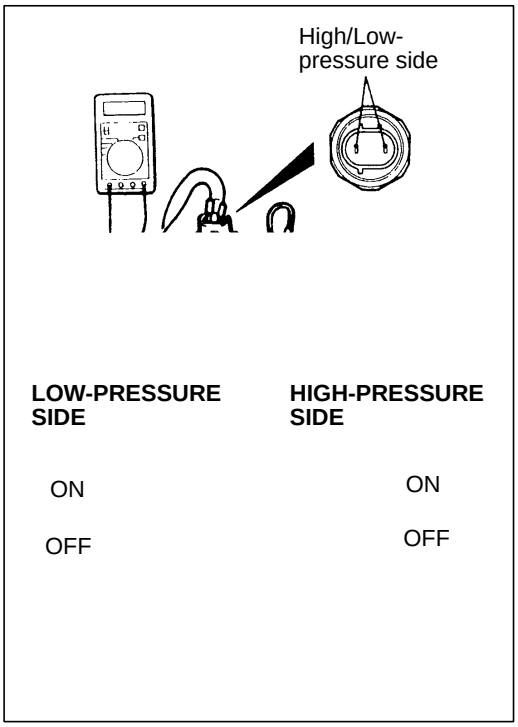

DUAL PRESSURE SWITCH CHECK

55201040129

1. Remove the dual pressure switch connector and connect the high/low-pressure side terminals located on the harness side as shown in the illustration.
2. Install a gauge manifold to the high-pressure side service valve of the refrigerant line. (Refer to Performance Test.)
3. When the high/low-pressure sides of the dual pressure switch are at operation pressure (ON) and there is continuity between the respective terminals, then the condition is normal. If there is no continuity, replace the switch.

Unit: kPa

Items	Switch position	
	OFF → ON	ON → OFF
Low-pressure side	186	177
High-pressure side	2,059	2,648

COMPRESSOR DRIVE BELT ADJUSTMENT

55200100101

Refer to GROUP 11 – On-vehicle Service.

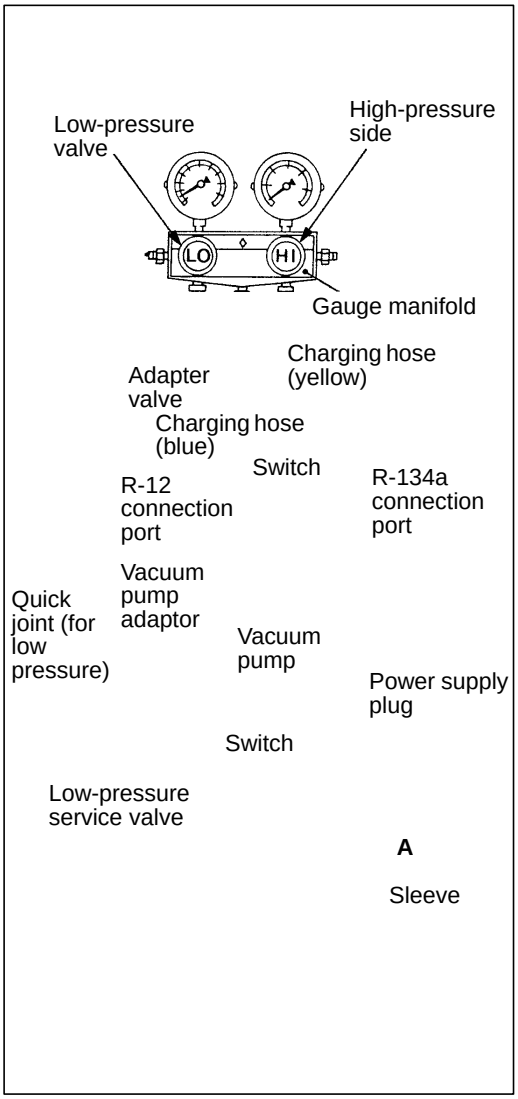

CHARGING

55200120121

1. With the handles turned back all the way (valve closed), install the adaptor valve to the low-pressure side of the gauge manifold.
2. Connect the charging hose (blue) to the adaptor valve.
3. Connect the quick joint (for low-pressure) to the charging hose (blue).
4. Connect the quick joint (for low-pressure) to the low-pressure service valve.

   NOTE
   The low-pressure service valve should be connected to the suction hose.

   Caution
   1. Use tools that are suited to R-134a.
   2. To install the quick joint, press section "A" firmly against the service valve until a click is heard. When connecting, run your hand along the hose while pressing to ensure that there are no bends in the hose.

5. Close the high and low-pressure valves of the gauge manifold.
6. Install the vacuum pump adaptor to the vacuum pump.
7. Connect the vacuum pump plug to the vacuum pump adaptor.
8. Connect the charging hose (yellow) to the R-134a connection port of the vacuum pump adaptor.
9. Tighten the adaptor valve handle (valve open).
10. Open the low-pressure valve of the gauge manifold.
11. Turn the power switch of the vacuum pump to the ON position.

    NOTE
    Even if the vacuum pump power switch is turned ON, the vacuum pump will not operate because of the power supply connection in step (7).

12. Turn the vacuum pump adaptor switch to the R-134a side to start the vacuum pump.

    Caution
    Do not operate the compressor for evacuation.

13. Evacuate to a vacuum reading of 100 kPa or higher (takes approx. 10 minutes).
14. Turn the vacuum pump adaptor switch OFF and allow to stand it for 5 minutes.

    Caution
    Do not operate the compressor in the vacuum condition; damage may occur.

15. Carry out a leak test. (Good if the negative pressure does not drop.)

    Caution
    If the negative pressure drops, increase the tightness of the connections, and then repeat the evacuation procedure from step (12).

16. With the handle turned back all the way (valve open), install the charging valve to the service van.
17. Turn the handle of the adaptor valve back all the way (valve closed), remove it from the gauge manifold and install the service can.
18. Tighten the handle of the charging valve (valve closed)

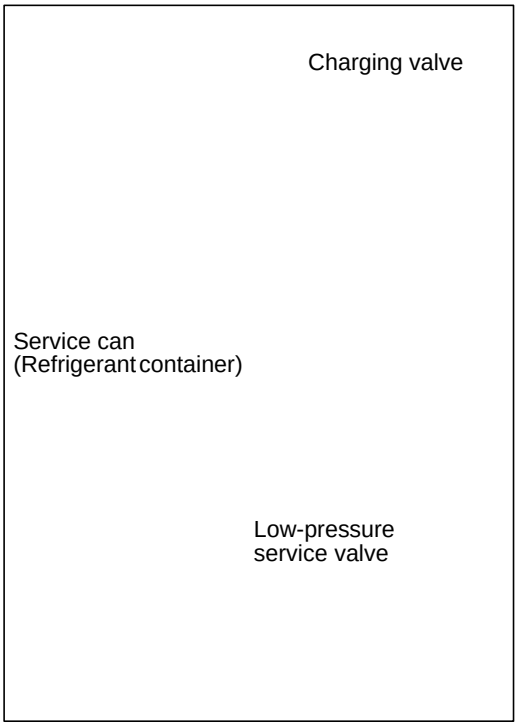

19. Turn the handle of the charging valve back (valve open) and tighten the handle of the adaptor valve (valve open) to charge the system with refrigerant.

    Caution
    If the service can is inverted, liquid refrigerant may be drawn into the compressor damaging it by liquid compression. Keep the service can upright to ensure that refrigerant is charged in gas state.

20. If the refrigerant is not drawn in, turn the handle of the adaptor valve back all the way (valve closed).
21. Check for gas leaks using a leak detector.
    If a gas leak is detected, re-tighten the connections, and then repeat the charging procedure from evacuation in step (12).

    Caution
    The leak detector for R-134a should be used.

22. Start the engine.
23. Operate the A/C and set to the lowest temperature (MAX. COOL).
24. Fix the engine speed at 1,500 r/min.
25. Tighten the handle of the adaptor valve (valve open) to charge the required volume of refrigerant.

    Caution
    If the service can is inverted, liquid refrigerant may be drawn into the compressor damaging it by liquid compression. Keep the service can upright to ensure that refrigerant is charged in gas state.

26. After charging with refrigerant, turn the handle of the adaptor valve back all the way (valve closed).
27. Tighten the charging valve handle (valve closed).
    Remove the quick joint (for low-pressure) from the low-pressure service valve.

    NOTE
    If the service can is not emptied completely, keep the handles of the charging valve and adaptor valve closed for the next charging.

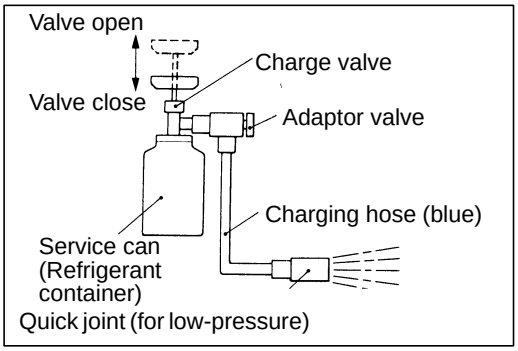

CORRECTING LOW REFRIGERANT LEVEL IN CASE THE SERVICE CAN IS USED.

1. Install the charge valve with the handle turned all the way back (valve open) to the service can.
2. Install the adaptor valve with the handle turned all the way back (valve close) to the charging valve.
3. Connect the charging hose (blue) to the adaptor valve.
4. Connect the charging hose (blue) to the quick joint (for low-pressure).
5. Tighten the handle of the charge valve (valve close), and pierce the service can.
6. Turn the handle of the adaptor valve to bleed the air.

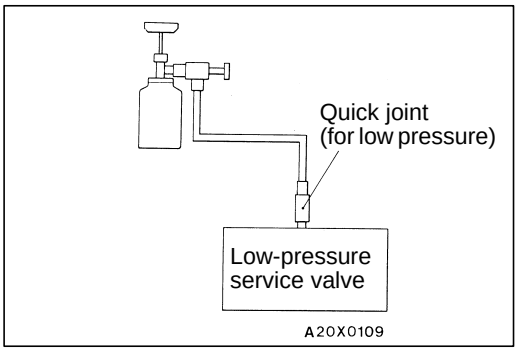

7. Install the quick joint (for low-pressure) to the low-pressure service valve.

   NOTE
   The low-pressure service valve should be connected to the suction hose.

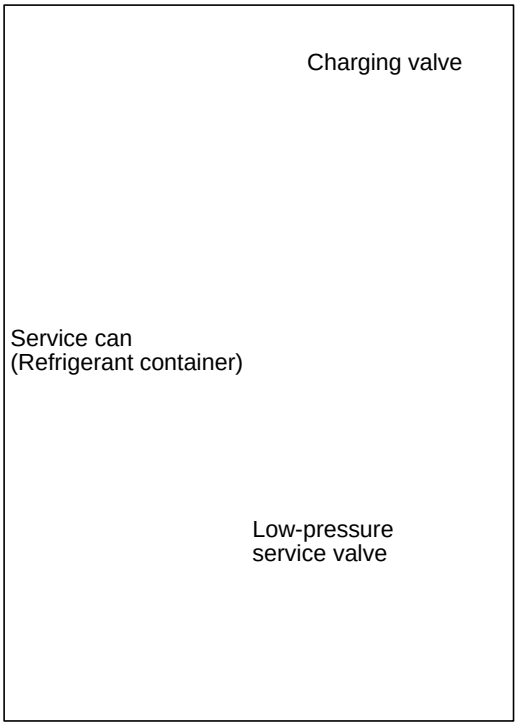

8. Start the engine.
9. Operate the air conditioner and set at the lowest temperature (MAX. COOL).
10. Fix the engine speed at 1,500 r/min.
11. Tighten the handle of the adaptor valve (valve open), and replenish refrigerant while checking the quantity through the sight glass.

    Caution
    If the service can is inverted, liquid refrigerant may be draw into the compressor damaging it by liquid compression. Keep the service can upright to ensure that refrigerant is changed in gas state.

12. After replenishing is completed, turn the handle of the adaptor valve all the way back (valve close), and remove the quick joint.

    NOTE
    When there is remainder of refrigerant in the service can, keep it for next use with the charge value and the valve of the adaptor valve being closed.

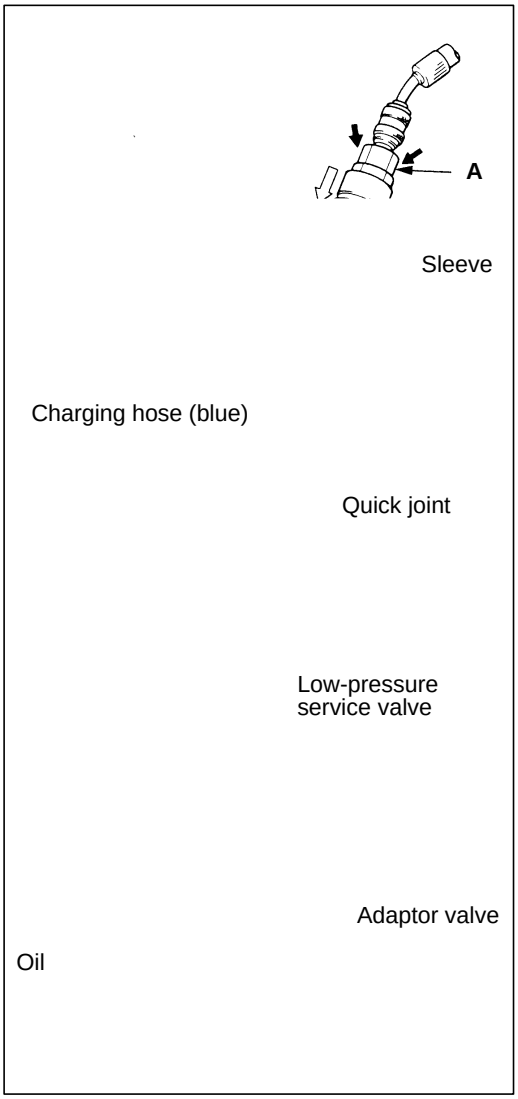

DISCHARGING SYSTEM

1. Run the engine at an engine speed of 1,200–1,500 r/min for approximately 5 minutes with the A/C operating to return to the oil.

   NOTE
   Returning the oil will be more effective if it is done while driving.

2. Stop the engine.
3. Connect the charging hose (blue) to the adaptor valve with its handle turned back all the way (valve closed).
4. Connect the quick joint to the charging hose (blue).
5. Install the quick joint to the low-pressure service valve.

   NOTE
   The low-pressure service valve should be connected to the suction hose.

   Caution
   To connect the quick joint, press section "A" firmly against the service valve until a click is heard.
   When connecting, run your hand along the hose while pressing to ensure that there are no bends in the hose.

6. Place the adaptor valve inside the container and discharge the refrigerant by opening the handle gradually so that oil does not gush out.

   NOTE
   Any oil remaining in the container should be returned to the A/C system.

REFILLING OF OIL IN THE A/C SYSTEM

Too little oil will provide inadequate compressor lubrication and cause a compressor failure. Too much oil will increase discharge air temperature.
When a compressor is installed at the factory, it contains 180 mℓ of refrigerant oil. While the A/C system is in operation, the oil is carried through the entire system by the refrigerant. Some of this oil will be trapped and retained in various parts of the system.
When the following system components are changed, it is necessary to add oil to the system to replace the oil being removed with the component.

Compressor oil: ZXL100PG

Quantity
Condenser: 30 mℓ
Evaporator: 50 mℓ
Suction hose: 10 mℓ
Receiver: 10 mℓ

Performance Temperature Chart

Garage ambient temperature °C	20	25	35	40
Discharge air temperature °C	3.6 – 9.5	4.0 – 11.0	7.0 – 9.0	11.0 – 13.8
Compressor high pressure kPa	1,120	1,236	1,814	2,050
Compressor low pressure kPa	115	131	152	175

REFRIGERANT LEAK REPAIR 55200150083

LOST CHARGE

If the system has lost all charge due to a leak:
1. Evacuate the system. (See procedure.)
2. Charge the system with approximately one pound of refrigerant.
3. Check for leaks.
4. Discharge the system.
5. Repair leaks.
6. Replace receiver drier.

   Caution
   Replacement filter-drier units must be sealed while in storage. The drier used in these units will saturate water quickly upon exposure to the atmosphere. When installing a drier, have all tools and supplies ready for quick reassembly to avoid keeping the system open any longer than necessary.

7. Evacuate and charge system.

LOW CHARGE

If the system has not lost all of its refrigerant charge; locate and repair all leaks. If it is necessary to increase the system pressure to find the leak (because of an especially low charge) add refrigerant. If it is possible to repair the leak without discharging the refrigerant system, use the procedure for correcting low refrigerant level.

HANDLING TUBING AND FITTINGS

Kinks in the refrigerant tubing or sharp bends in the refrigerant hose lines will greatly reduce the capacity of the entire system. High pressures are produced in the system when it is operating. Extreme care must be exercised to make sure that all connections are pressure tight. Dirt and moisture can enter the system when it is opened for repair or replacement of lines or components. The following precautions must be observed. The system must be completely discharged before opening any fitting of connection in the refrigeration system. Open fittings with caution even after the system has been discharged. If any pressure is noticed as a fitting is loosened, allow trapped pressure to bleed off very slowly.
Never attempt to rebend formed lines to fit. Use the correct line for the installation you are servicing. A good rule for the flexible hose lines is keep the radius of all bends at least 10 times the diameter of the hose.
Sharper bends will reduce the flow of refrigerant. The flexible hose lines should be routed so that they are at least 80 mm from the exhaust manifold. It is good practice to inspect all flexible hose lines at least once a year to make sure they are in good condition and properly routed.
Unified plumbing connections with O-rings, these O-rings are not reusable.

COMPRESSOR NOISE

55200870095

You must first know the conditions when the noise occurs. These conditions are: weather, vehicle speed, in gear or neutral, engine temperature or any other special conditions.

Noises that develop during A/C operation can often be misleading. For example: what sounds like a failed front bearing or connecting rod, may be caused by loose bolts, nuts, mounting brackets, or a loose clutch assembly. Verify accessory drive belt tension (power steering or alternator).

Improper accessory drive belt tension can cause a misleading noise when the compressor is engaged and little or no noise when the compressor is disengaged.

Drive belts are speed-sensitive. That is, at different engine speeds, and depending upon belt tension, belts can develop unusual noises that are often mistaken for mechanical problems within the compressor.

ADJUSTMENT

1. Select a quiet area for testing. Duplicate conditions as much as possible. Switch compressor on and off several times to clearly identify compressor noise. To duplicate high ambient conditions (high head pressure), restrict air flow through condenser. Install manifold gauge set to make sure discharge pressure doesn't exceed 2,070 kPa.
2. Tighten all compressor mounting bolts, clutch mounting bolt, and compressor drive belt. Check to assure clutch coil is tight (no rotation or wobble).
3. Check refrigerant hoses for rubbing or interference that can cause unusual noises.
4. Check refrigerant charge. (See "Charging System".)
5. Recheck compressor noise as in Step 1.
6. If noise still exists, loosen compressor mounting bolts and retorque. Repeat Step 1.
7. If noise continues, replace compressor and repeat Step 1.

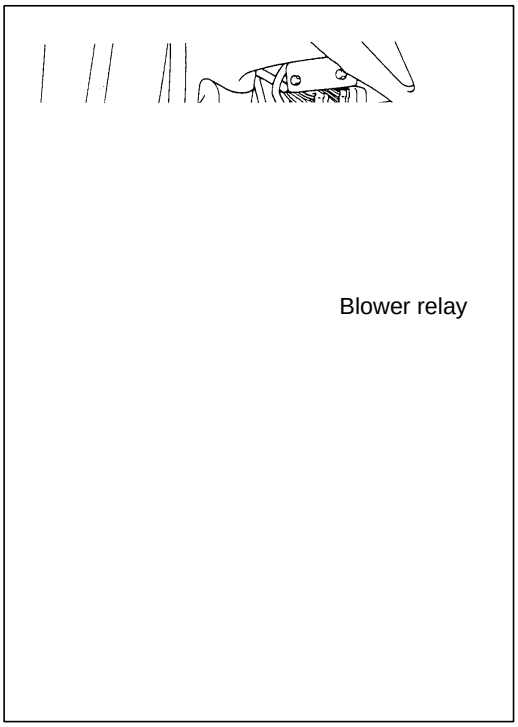

POWER RELAY CONTINUITY CHECK

55200880142

BLOWER RELAY

Battery voltage	Terminal No.			
	1	3	2	5
Power is not supplied	○	○		
Power is supplied	⊕	⊖	○	○

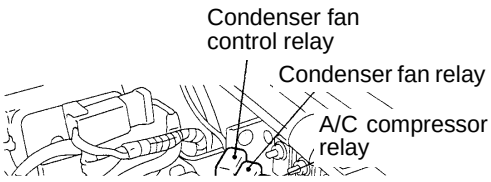

A/C COMPRESSOR RELAY, CONDENSER FAN RELAY, CONDENSER FAN CONTROL RELAY

Battery voltage	Terminal No.			
	2	4	1	3
Power is not supplied	○	○		
Power is supplied	⊕	⊖	○	○

IDLE-UP OPERATION CHECK

55200160147

<Petrol-powered vehicles>

1. Before inspection and adjustment, set vehicle in the following condition:
   - Engine coolant temperature: 80–90°C
   - Lights, electric cooling fan and accessories: Set to OFF
   - Transmission: Neutral (N or P for vehicles with A/T)
   - Steering wheel: Straightforward
2. Check whether or not the idling speed is the standard value.

   Standard value: 750 ± 100 r/min
3. When the A/C is running after turning the A/C switch to ON, and the blower switch to the MH or HI position, check to be sure that the idle speed is at the standard value.

   Standard value: 900 ± 50 r/min

   NOTE
   There is no necessity to make an adjustment, because the idling speed is automatically adjusted by the ISC system. If, however, there occurs a deviation from the standard value for some reason, check the ISC system. (Refer to GROUP 13A – On-vehicle Service.)

<Diesel-powered vehicles>

1. Before inspection and adjustment, set vehicle in the following condition:
   - Engine coolant temperature: 80 – 90 °C
   - Lights, electric cooling fan and accessories: Set to OFF
   - Transmission: Neutral (N or P for vehicles with A/T)
   - Steering wheel: Straight forward
2. Check whether or not the idling speed is the standard value.

   Standard value: 750 ± 100 r/min
3. If there is a deviation of the idling speed from the standard value, adjust the idling speed. (Refer to GROUP 11 – On-vehicle Service.)
4. Check to be sure that the idling speed becomes the standard value when the A/C switch is switched ON and the A/C is activated.

   Standard value: 900 ± 50 r/min

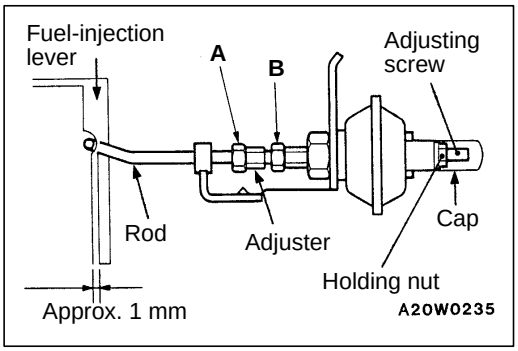

5. If there is a deviation of the idling speed from the standard value, adjust the idling speed by the following the procedures.
   (1) Loosen nuts (A) and (B).
   (2) Adjust, by using the adjuster, so that the end of the vacuum actuator's rod is at the position indicated in the illustration.
   (3) Securely tighten nuts (A) and (B).
   (4) After activating the vacuum actuator, check to be sure that the rod and the lever do not contact when the activation is cancelled.
   (5) Remove the cap and loosen the nut for holding.
   (6) Adjust to the specified r/min by turning the adjusting screw.
   (7) Securely tighten the holding nut, and then attach the cap.

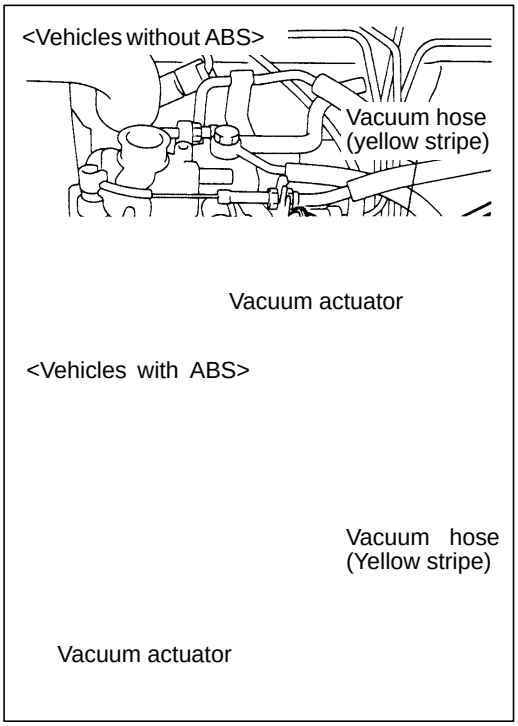

VACUUM ACTUATOR CHECK <Diesel-powered Vehicles>

55200890039

1. Pull off the vacuum hose (yellow stripe) connected to the vacuum actuator.

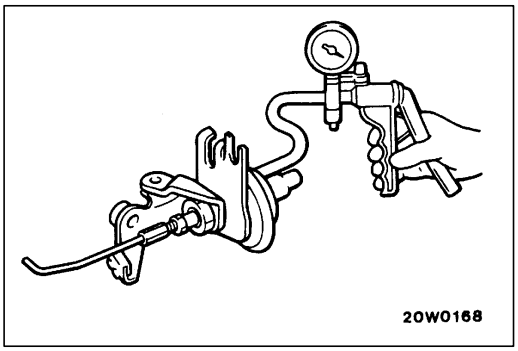

2. Connect a manual vacuum pump to the nipple of the vacuum actuator.
3. Check to be sure that the vacuum actuator rod starts to contact when 8 kPa of negative pressure is applied, and that the rod contracts to its full stroke when 12 kPa of negative pressure is applied.
4. Disconnect the manual vacuum pump from the vacuum actuator, and connect the vacuum hose (yellow stripe) to the vacuum actuator.
5. Start the engine and let it run at idle. Then cover the end of the vacuum hose (yellow stripe) with a finger and check the negative pressure when the A/C switch is turned on and off.

A/C switch	Negative pressure at hose end
OFF	No
ON	Yes

Caution
Be careful, when connecting the vacuum hose not to damage it.

LEVER POSITION SWITCH CHECK <Diesel-powered Vehicles (A/T)>

55200800018

1. Before inspection, set the vehicle to the following condition.
   - Ignition switch: ON (Do not start the engine)
   - Blower switch: ON (LO, HL, HM or HI position)
   - A/C switch: ON
2. When the vehicle is at full acceleration (accelerator pedal depression amount is approximately 90% ± 7%), check that the magnetic clutch turns OFF for a period of approximately 7 seconds.
3. If there is a malfunction, adjust the installation position of the lever position switch by the following procedure.
   (1) Check that the idle speed is at the standard value, and adjust it if necessary.

   Standard value: 750 ± 100 r/min

   (2) Adjust the accelerator cable.
   (3) Depress the accelerator pedal fully to fully open the throttle lever of the fuel injection pump.

   Caution
   When fully opening the throttle lever of the fuel injection pump, always open it by the accelerator pedal, not from the injection pump side.

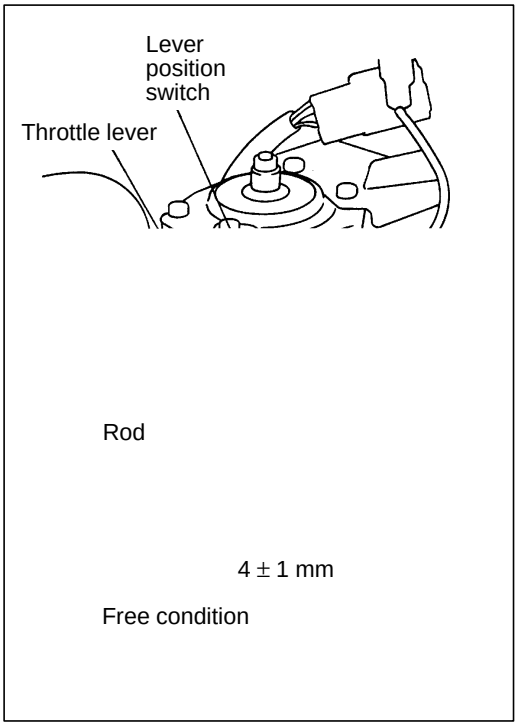

   (4) Adjust the stroke of the lever position switch rod by moving the lever position switch so that the rod is pushed down 4 ± 1 mm from the free position.

HEATER CONTROL ASSEMBLY AND A/C SWITCH

55200240049

REMOVAL AND INSTALLATION

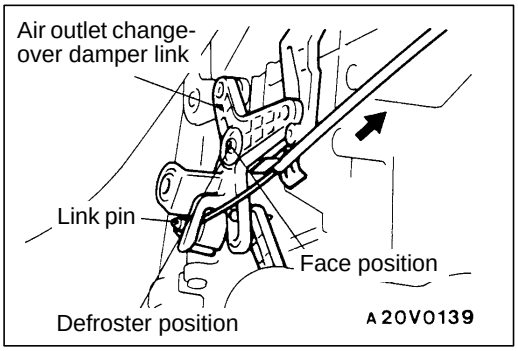

INSTALLATION SERVICE POINT

▶A◀ HEATER CONTROL ASSEMBLY INSTALLATION

1. Follow the steps below to install the air outlet changeover damper link cable.
   (1) Set the air outlet changeover control knob on the heater control assembly to the defroster position.
   (2) Set the air outlet changeover damper link of the heater unit to the defroster position as shown in the illustration, and then connect the cable to the link pin.
   (3) Push the outer cable in the direction of the arrow so that there is no looseness, and then secure it with clip.

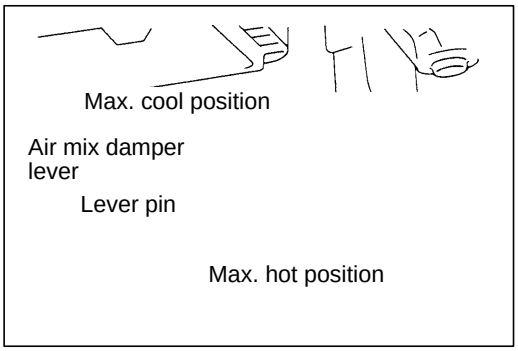

2. Follow the steps below to instal the air mix damper lever cable.
   (1) Set the temperature control knob on the heater control assembly to the max. hot position.
   (2) Set the air mix damper lever of the heater unit to the max. hot position as shown in the illustration, and then connect the cable to the lever pin.
   (3) Push the outer cable in the direction of the arrow so that there is no looseness, and then secure it with clip.

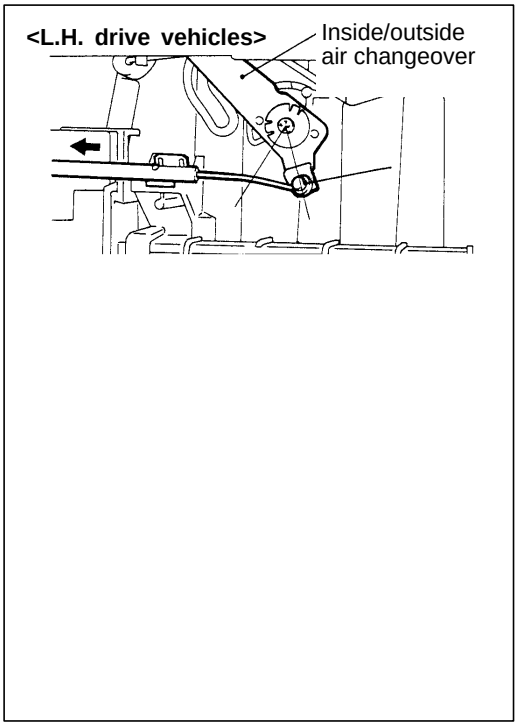

3. Follow the steps below to install the inside/outside air changeover damper link cable.
   (1) Set the inside/outside air changeover control knob on the heater control assembly to the inside recirculation position.
   (2) Set the inside/outside air changeover damper link of the blower assembly to the inside recirculation position as shown in the illustration, and then connect the cable to the link pin.
   (3) Push the outer cable in the direction of the arrow so that there is no looseness, and then secure it with clip.
4. After installation, ensure that each damper operates smoothly by operating the heater control assembly knob.

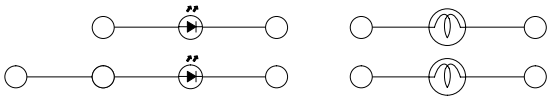

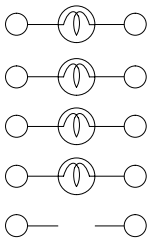

HEATER UNIT AND HEATER CORE

55100190136

REMOVAL AND INSTALLATION

Pre-removal and Post-installation Operation
- Refrigerant Discharging and Charging <Vehicles with A/C> (Refer to P. 55-8.)
- Engine Coolant Draining and Refilling (Refer to GROUP 14 – On-vehicle Service.)
- Instrument Panel Removal and Installation (Refer to GROUP 52A.)
- Joint Duct Removal and Installation <Vehicles without A/C> (Refer to P.55-26.)

Caution: SRS
When removing and installing the heater unit from vehicles equipped with SRS, do not let it bump against the SRS diagnostic unit or the components.

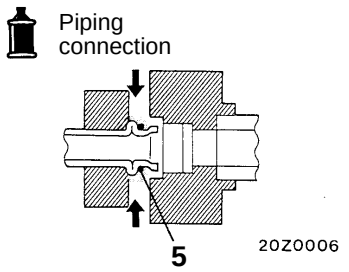

Compressor oil: ZXL 100PG

Removal steps

1. Center reinforcement
2. Center ventilation duct
3. Drain hose <Vehicles with A/C>
4. ◀A▶ Suction pipe or hose and discharge pipe connection <Vehicles with A/C>
5. O-ring
6. Heater hose connection
7. ▶A◀ Evaporator <Vehicles with A/C>
8. Heater unit
9. Heater core

REMOVAL SERVICE POINTS

◀A▶ SUCTION PIPE OR HOSE, DISCHARGE PIPE DISCONNECTION

Plug the disconnected hose and the evaporator nipple not to let foreign matter get into them.

Caution
Seal the hoses completely, otherwise the compressor oil and receiver will absorb water vapor easily.

INSTALLATION SERVICE POINT

▶A◀ EVAPORATOR INSTALLATION

When replacing the evaporator, refill with a specified amount of compressor oil and install it (to the vehicle).

Compressor oil: ZXL 100PG
Quantity: 50 mℓ

BLOWER ASSEMBLY AND RESISTOR

55100280147

REMOVAL AND INSTALLATION

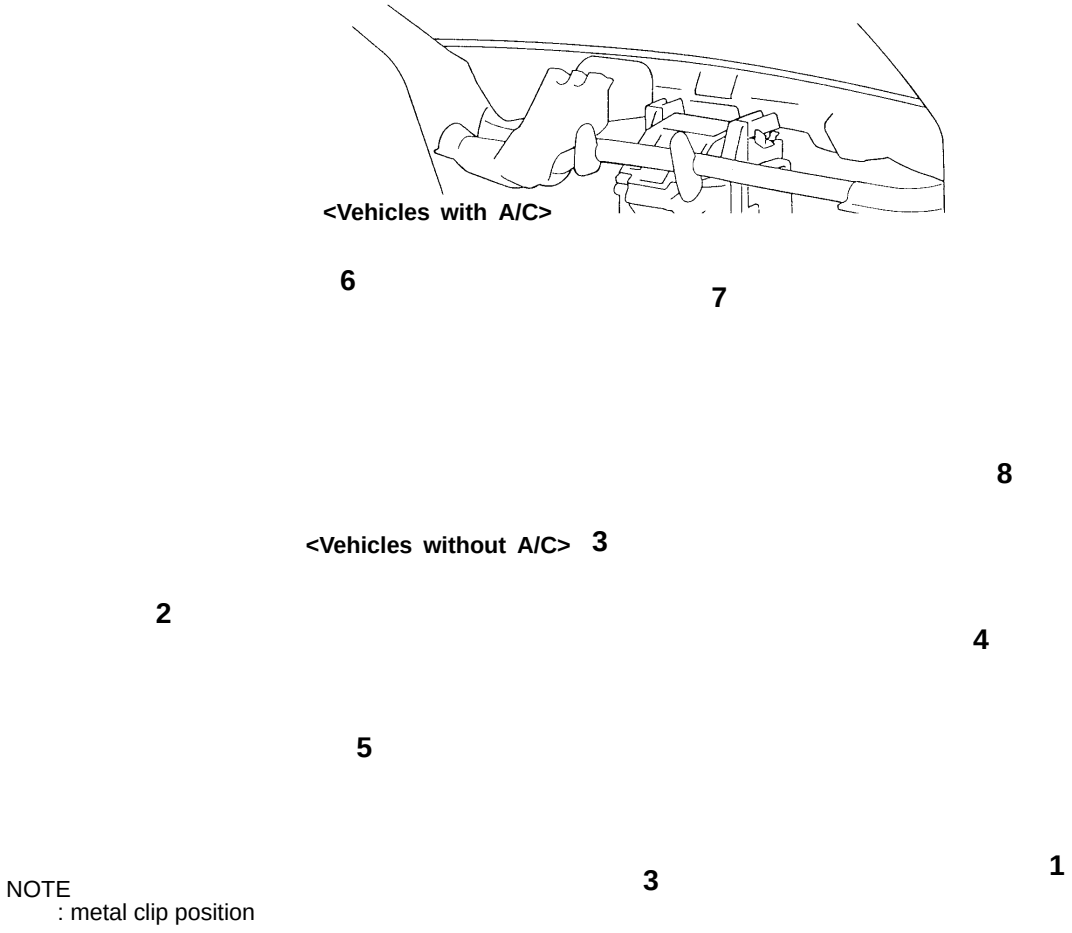

Resistor, blower fan and motor removal steps

1. Under cover
2. Glove box assembly
3. Resistor
4. Blower fan and motor

Blower case removal steps

- Instrument panel (Refer to GROUP 52A.)

5. Joint duct <Vehicles without A/C>
6. Evaporator <Vehicles with A/C> (Refer to P. 55-28.)

▶A◀ 7. Inside/outside air changeover damper cable connection

8. Blower case assembly

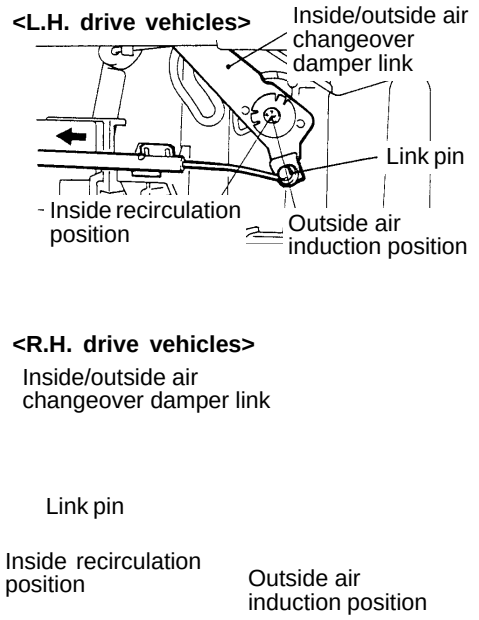

INSTALLATION SERVICE POINT

▶A◀ INSIDE/OUTSIDE AIR CHANGEOVER DAMPER CABLE INSTALLATION

1. Set the inside/outside air changeover control knob on the heater control assembly to the inside recirculation position.
2. Set the inside/outside air changeover damper link of the blower assembly to the inside recirculation position as shown in the illustration, and then connect the cable to the link pin.
3. Push the outer cable in the direction of the arrow so that there is no looseness, and then secure it with clip.

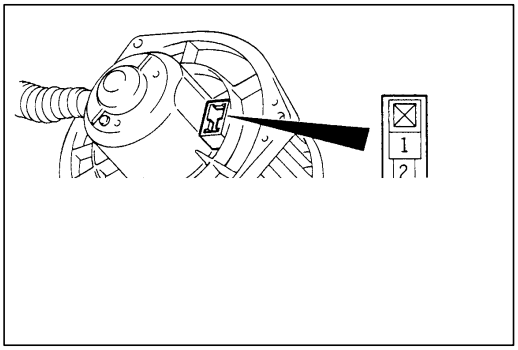

INSPECTION

55100290072

BLOWER FAN AND MOTOR CHECK

When battery voltage is applied between the terminals, check that the motor operates. Also, check that there is no abnormal noise.

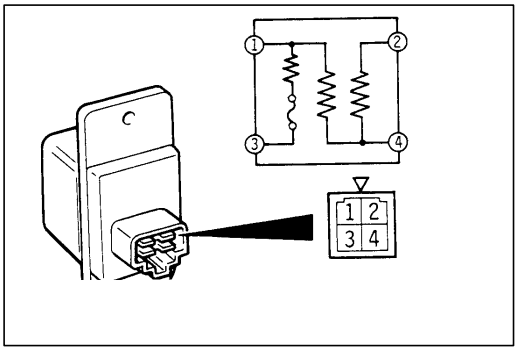

RESISTOR CHECK

Use a circuit tester to measure the resistance between the terminals as indicated below. Check that the measured value is at the standard value.

Standard value:
<L.H. drive vehicles>

Measurement terminal	Standard value Ω
Between terminals 3 and 2 (LO)	2.21
Between terminals 3 and 4 (ML)	0.97
Between terminals 3 and 1 (MH)	0.35

<R.H. drive vehicles>

Measurement terminal	Standard value Ω
Between terminals 3 and 2 (LO)	2.81
Between terminals 3 and 4 (ML)	1.28
Between terminals 3 and 1 (MH)	0.33

EVAPORATOR <VEHICLES WITH A/C>

55200360110

REMOVAL AND INSTALLATION

Pre-removal and Post-installation Operation
- Refrigerant Discharging and Charging (Refer to P. 55-8.)
- Under Cover, Glove Box Assembly Removal and Installation (Refer to GROUP 52A – Instrument Panel.)

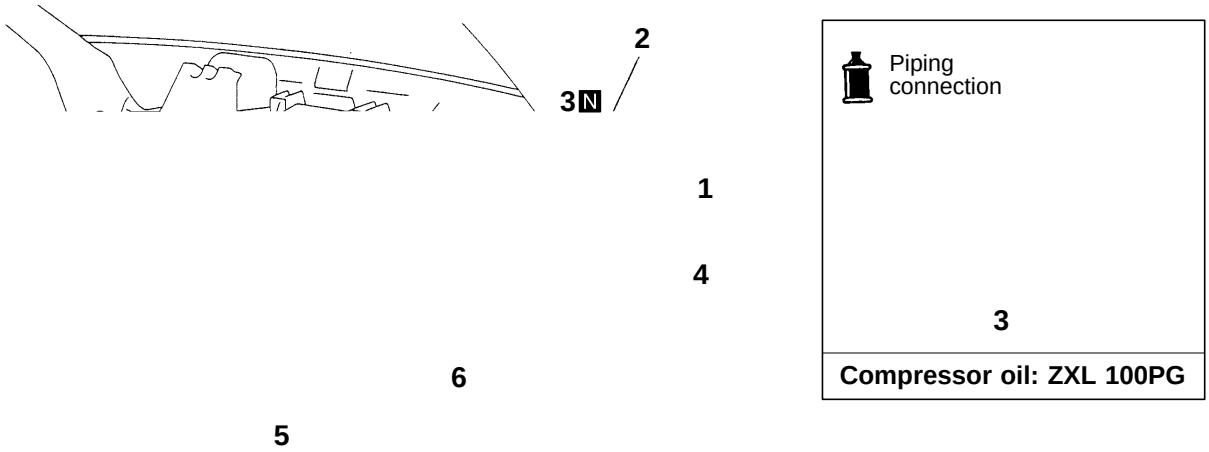

Removal steps

◀A▶ 1. Suction pipe or hose connection
◀A▶ 2. Discharge pipe connection
3. O-ring
4. Drain hose
5. Center frame B
▶A◀ 6. Evaporator

REMOVAL SERVICE POINT

◀A▶ SUCTION PIPE OR HOSE, DISCHARGE PIPE DISCONNECTION

Plug the disconnected hose and the evaporator nipple not to let foreign matter get into them.

Caution
Seal the hoses completely, otherwise the compressor oil and receiver will absorb water vapour easily.

INSTALLATION SERVICE POINT

▶A◀ EVAPORATOR INSTALLATION

When replacing the evaporator, refill it with a specified amount of compressor oil and install it (to the vehicle).

Compressor oil: ZXL 100PG
Quantity: 50 mℓ

DISASSEMBLY AND REASSEMBLY

55200380109

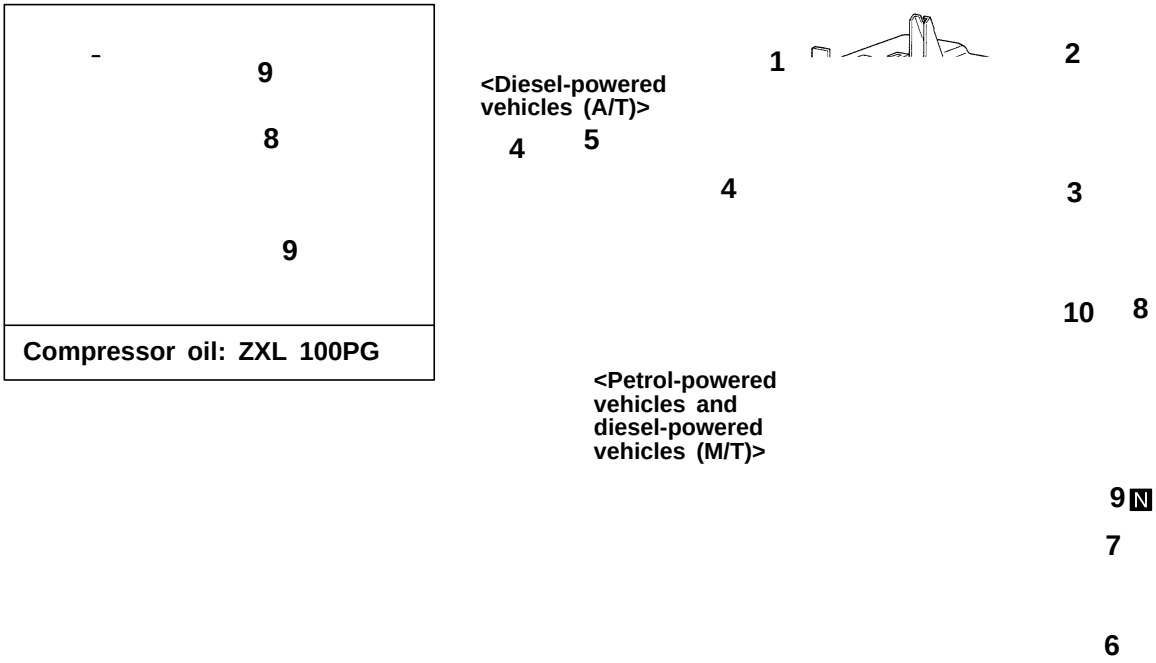

Disassembly steps

1. Clip
2. Evaporator cover (upper)
3. Lining, upper
4. Thermostat
5. Compressor-ECU <Diesel-powered vehicles (A/T)>
6. Evaporator cover (lower)
7. Lining, lower
8. Expansion valve
9. O-ring
10. Evaporator

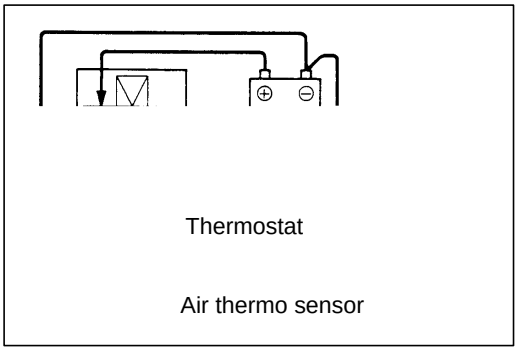

INSPECTION

55200370038

THERMOSTAT, AIR THERMO SENSOR CHECK

1. Apply battery voltage between the thermostat terminals shown in the illustration, and connect a test lamp to terminal (3).
2. Blow cool air onto the air thermo sensor and check that the test lamp switches off when the cool air temperature becomes approximately 3 °C or less.

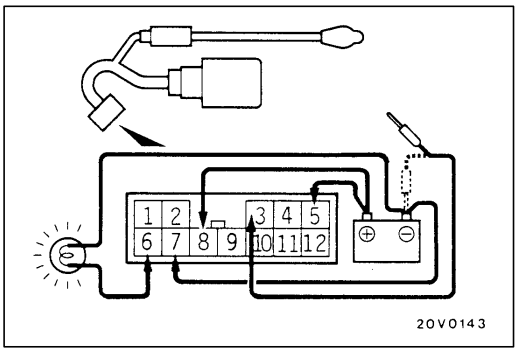

COMPRESSOR-ECU SIMPLE TEST <Diesel-powered Vehicles (A/T)>

1. Check to be sure that thermostat has no defect.
2. Apply battery voltage between the connecters shown in the illustration, and connect a test lamp to terminal (6).
3. Check that the test lamp illuminates for 7 seconds only when terminal (3) is earthed.

COMPRESSOR AND TENSION PULLEY

55200410174

REMOVAL AND INSTALLATION

Pre-removal Operation
- Refrigerant Discharging (Refer to P. 55-12.)
- Battery Removal

CAUTION: SRS

Post-installation Operation
- Drive Belt Tension Adjustment (Refer to GROUP 11 – On-vehicle Service.)
- Battery Installation
- Refrigerant Charging (Refer to P. 55-8.)

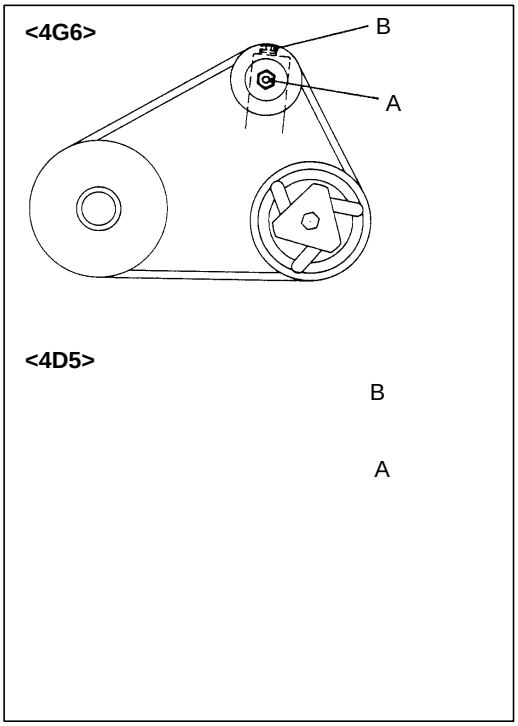

REMOVAL SERVICE POINTS

◀A▶ DRIVE BELT REMOVAL

1. Loosen the nut “A” for holding.
2. Loosen the bolt “B” for adjustment.
3. Remove the drive belt.

◀B▶ SUCTION HOSE, DISCHARGE HOSE DISCONNECTION

Plug the disconnected hose and the compressor nipple not to let foreign matter get into them.

Caution
Seal the hoses completely, otherwise the compressor oil and receiver will absorb water vapour easily.

◀C▶ COMPRESSOR REMOVAL

When doing this work, be careful not to spill the compressor oil.

INSTALLATION SERVICE POINT

▶A◀ COMPRESSOR INSTALLATION

If a new compressor is installed, first adjust the amount of oil according to the procedures described below, and then install the compressor.

(1) Measure the amount (X mℓ) of oil within the removed compressor.
(2) Drain (from the new compressor) the amount of oil calculated according to the following formula, and then install the new compressor.
New compressor oil amount

180 mℓ – X mℓ = Y mℓ

NOTE
(1) Y mℓ indicates the amount of oil in the refrigerant line, the condenser, the evaporator etc.
(2) When replacing the following parts at the same times as the compressor, subtract the rated oil amount of the each part from Y mℓ and discharge from the new compressor.

Quantity
Evaporator: 50 mℓ
Condenser: 30 mℓ
Suction hose: 10 mℓ
Receiver: 10 mℓ

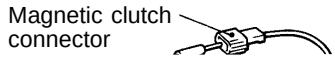

INSPECTION

COMPRESSOR MAGNETIC CLUTCH OPERATION CHECK

55200850105

Connect the battery (+) terminal to the compressor side terminal, and earth the battery (–) terminal to the body of the compressor. The condition is normal if the sound of the magnetic clutch (click) can be heard.

COMPRESSOR MAGNETIC CLUTCH AIR GAP CHECK

55201110011

Check whether or not the air gap of the clutch is within the standard value.

Standard value: 0.3 – 0.6 mm

REMOVAL SERVICE POINTS

◀A▶ DISCHARGE PIPE "B"/DISCHARGE PIPE "A"/DISCHARGE HOSE DISCONNECTION

Plug the disconnected pipe, hose and the condenser nipple not to let foreign matter get into them.

Caution
Seal the hoses completely, otherwise the compressor oil and receiver will absorb water vapour easily.

INSTALLATION SERVICE POINT

▶A◀ CONDENSER INSTALLATION

When replacing the condenser, refill it with a specified amount of compressor oil and install it. (to the vehicle).

Compressor oil: ZXL 100PG
Quantity: 30 mℓ

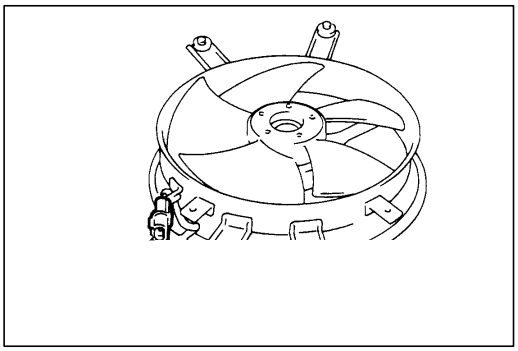

INSPECTION

55200680094

CONDENSER FAN MOTOR CHECK

Check to be sure that the condenser fan motor operates when battery voltage is applied to terminal 1 and terminal 2 earthed.

REFRIGERANT LINE

55200640146

REMOVAL AND INSTALLATION

<L.H. DRIVE VEHICLES>

Pre-removal and Post-installation Operation
- Refrigerant Discharging and Charging (Refer to P. 55-8.)
- Radiator Grill Removal and Installation (Refer to GROUP 51.)
- Front Bumper Removal and Installation (Refer to GROUP 51.)
- Battery Removal and Installation
- Windshield Washer Tank Removal and Installation (Refer to GROUP 51 – Windshield Wiper and Washer.)

CAUTION: SRS
When removing and installing the suction pipe or discharge pipe C from vehicles equipped with SRS, do not let it bump against the front impact sensor (R.H.).

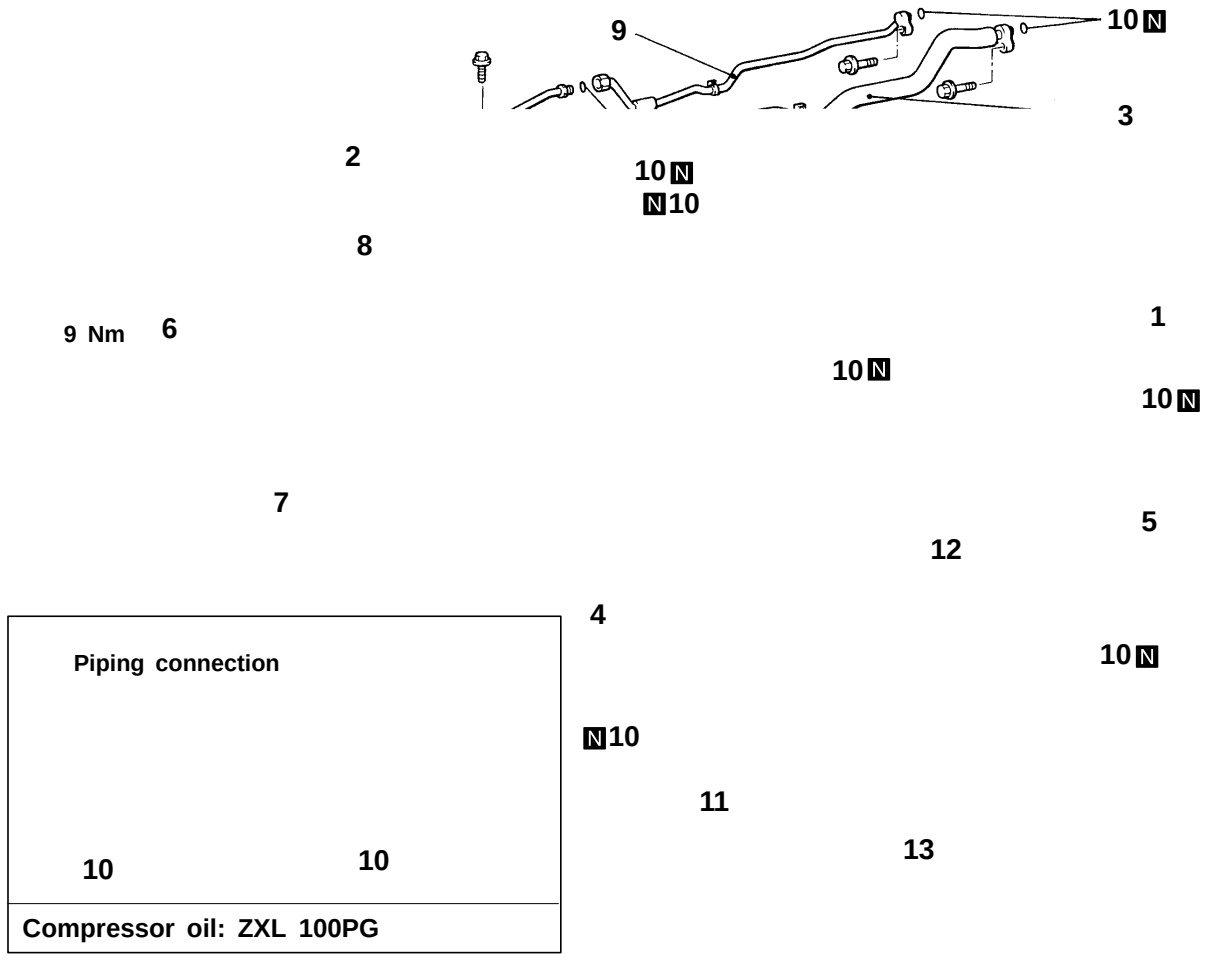

◀A▶ ▶A◀ 1. Suction hose
◀A▶ 2. Suction pipe
- Power steering oil reservoir (Refer to GROUP 37A – Power Steering Hose.)

◀A▶ 3. Suction pipe
◀A▶ 4. Discharge pipe A
◀A▶ 5. Discharge hose
6. Hood latch
7. Hood lock stay
- Engine oil cooler <Diesel-powered vehicles> (Refer to GROUP 12.)

◀A▶ 8. Discharge pipe B
◀A▶ 9. Discharge pipe C
10. O-ring
◀A▶ ▶A◀ 11. Receiver assembly
12. Dual pressure switch
13. Receiver bracket

<R.H. DRIVE VEHICLES>

Pre-removal and Post-installation Operation
- Refrigerant Discharging and Charging (Refer to P. 55-8.)
- Radiator Grille Removal and Installation (Refer to GROUP 51.)
- Front Bumper Removal and Installation (Refer to GROUP 51.)

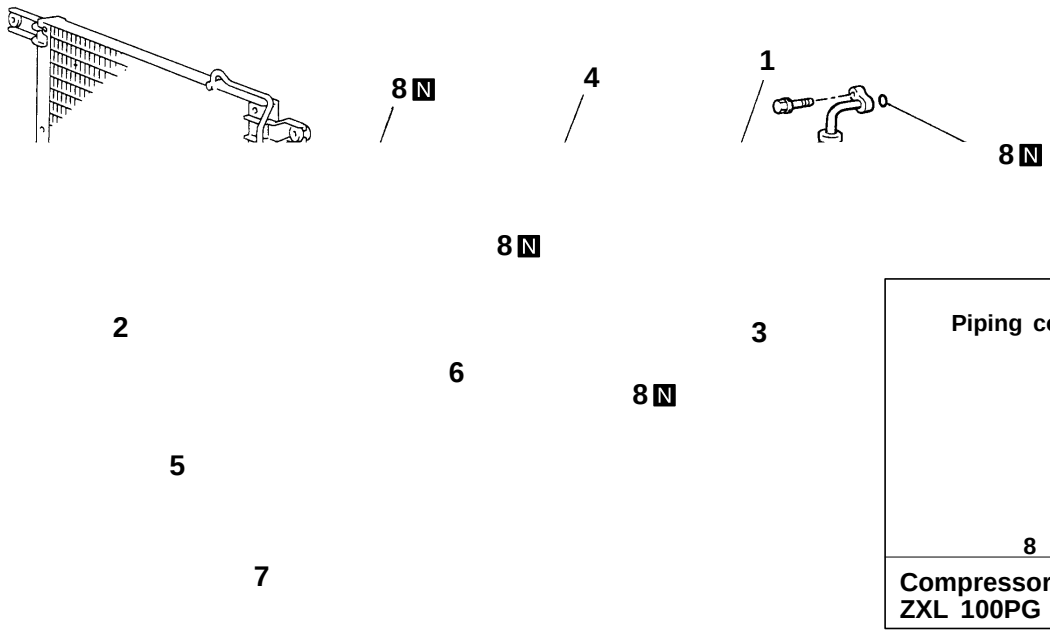

◀A▶ ▶A◀ 1. Suction hose
◀A▶ 2. Discharge pipe A
◀A▶ 3. Discharge pipe B
◀A▶ 4. Discharge hose
◀A▶ ▶A◀ 5. Receiver assembly
6. Dual pressure switch
7. Receiver bracket
8. O-ring

REMOVAL SERVICE POINT

◀A▶ HOSE/PIPE/RECEIVER ASSEMBLY DISCONNECTION

Plug the disconnected hose, the receiver, the evaporator and the compressor nipple not to let foreign matter get into them.

Caution
Seal the hoses completely, otherwise the compressor oil and receiver will absorb water vapour easily.

INSTALLATION SERVICE POINT

▶A◀ SUCTION HOSE/RECEIVER ASSEMBLY INSTALLATION

When replacing the suction hose or receiver assembly, refill them with a specified amount of compressor oil, and then install them.

Compressor oil: ZXL 100PG

Quantity:
Suction hose: 10 mℓ
Receiver assembly: 10 mℓ

ENGINE COOLANT TEMPERATURE SWITCH <Diesel-powered Vehicles>

55200730058

REMOVAL AND INSTALLATION

Pre-removal and Post-installation Operation
- Coolant Refilling (Refer to GROUP 14 – On-vehicle Service.)
- Intercooler Removal and Installation <Vehicles with intercooler> (Refer to GROUP 15.)

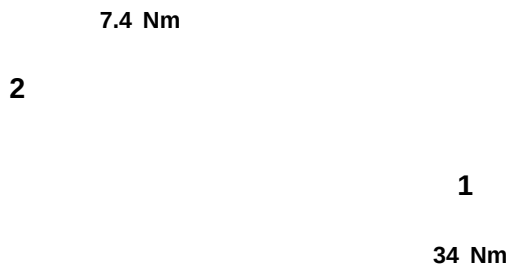

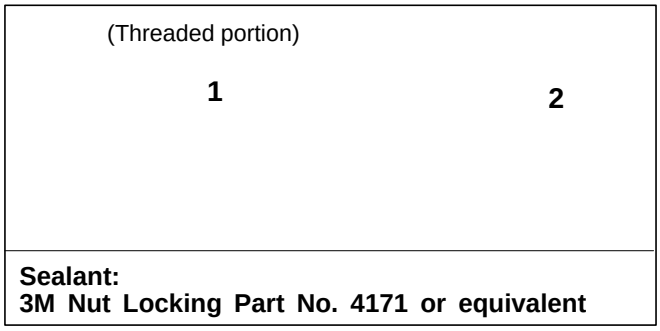

1. Engine coolant temperature switch (for A/C cut-off)
2. Engine coolant temperature switch (for condenser fan)

IDLE-UP SYSTEM <Diesel-powered Vehicles>

55200810011

REMOVAL AND INSTALLATION

Pre-removal Operation
- Intercooler Removal <Vehicle with intercooler> (Refer to GROUP 15.)

Post-installation Operation
- Accelerator Cable Adjustment (Refer to GROUP 17 – On-vehicle Service.)
- Throttle Cable Adjustment <A/T> (Refer to GROUP 23 – On-vehicle Service.)
- Intercooler Installation <Vehicles with intercooler> (Refer to GROUP 15.)
- Idle-up Operation Check (Refer to P. 55-16.)

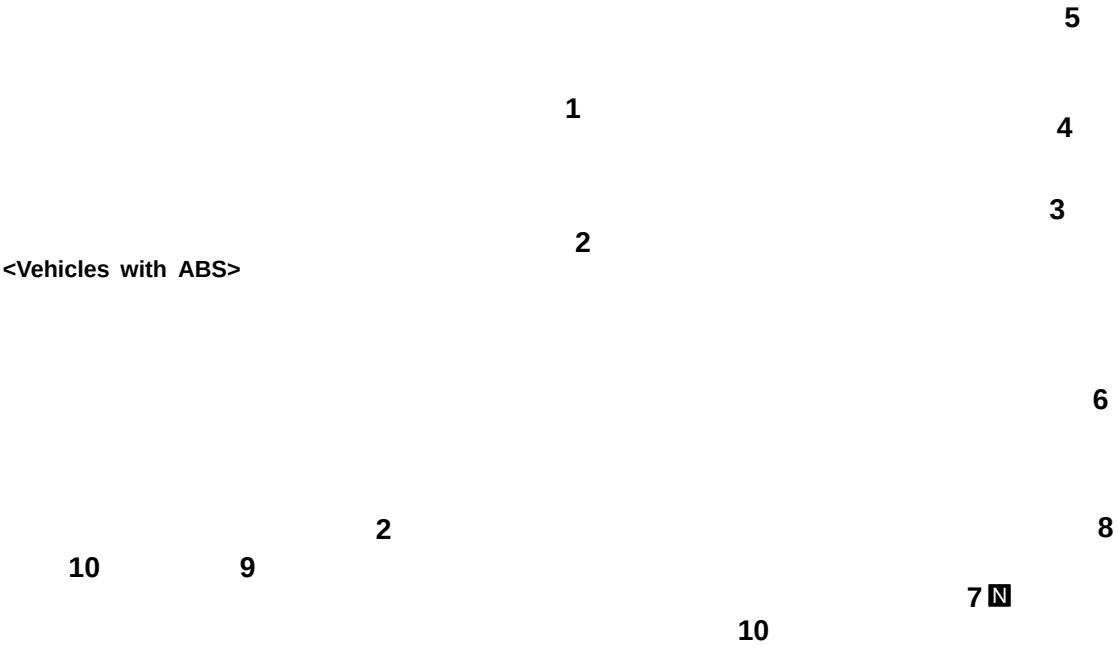

Idle-up solenoid valve removal steps

1. Vacuum hose (white stripe) connection
2. Vacuum hose (yellow stripe) connection
3. Idle-up solenoid valve
4. Solenoid valve bracket B
5. Solenoid valve bracket A

Vacuum actuator assembly removal steps

2. Vacuum hose (yellow stripe) connection
6. Accelerator cable connection
7. Split pin <A/T>
8. Throttle cable connection <A/T>
9. Vacuum hose (blue stripe) <Vehicles with ABS>
10. Vacuum actuator assembly

<Single cab>

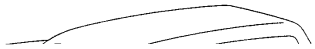

11 11

<Double cab>

<Club cab> 11 11

12 11 12 11

<Single cab>

Air outlet duct assembly removal steps

- Rear body (Refer to GROUP 42.)

11. Air outlet duct assembly

<Double cab>

Air outlet duct assembly removal steps

- Rear body (Refer to GROUP 42.)

11. Air outlet duct assembly

<Club cab>

Air outlet duct assembly removal steps

- Rear body (Refer to GROUP 42.)

11. Air outlet duct assembly

Rear ventilation duct removal steps

- Back panel trim, lower (Refer to GROUP 52A – Trims.)
- Quarter trim, lower (Refer to GROUP 52A – Trims.)

12. Rear ventilation duct

NOTES

NOTES

SERVICE BULLETIN

QUALITY INFORMATION ANALYSIS
OVERSEAS SERVICE DEPT. MITSUBISHI MOTORS CORPORATION

SERVICE BULLETIN	**No.:** MSB-99E55-503		
	Date: 1999-12-15	**<Model>**	**<M/Y>**
Subject: OMISSION OF DISASSEMBLY / REASSEMBLY OF A/C COMPRESSOR ASSEMBLY		(EC,EXP) L200 (K00)	97-10
Group: HEATER, A/C & VENTILATION	**Draft No.:** 99SY060115		

CORRECTION

INTERNATIONAL CAR ADMINISTRATION OFFICE

T.NITTA - PROJECT LEADER
AFTER SALES SERVICE & CS PROMOTION2. Applicable Manuals:

Manual	Pub. No.	Language	Page(s)
'97 L200 Workshop Manual Chassis	PWTE96E1	(English)	55-5, 32
	PWTS96E1	(Spanish)	
	PWTF96E1	(French)	
	PWTG96E1	(German)	

3. Details:

'97 L200 Workshop Manual Chassis, page 2,3,4,5

SPECIAL TOOL

Tool	Number	Name	Use
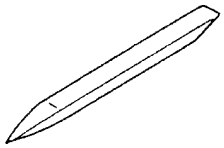			

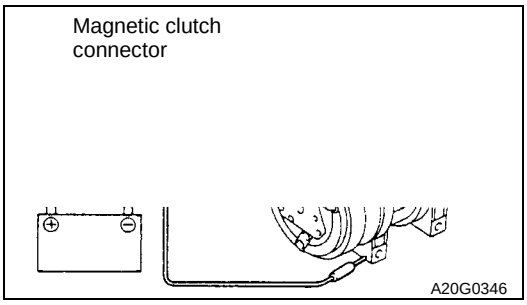

INSPECTION

COMPRESSOR MAGNETIC CLUTCH OPERATION CHECK 55200850105

Connect the battery (+) terminal to the compressor side terminal, and earth the battery (-) terminal to the body of the compressor. The condition is normal if the sound of the magnetic clutch (click) can be heard.

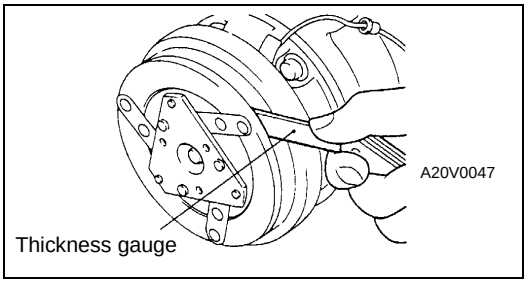

COMPRESSOR MAGNETIC CLUTCH AIR GAP CHECK 55201110011

Check whether or not the air gap of the clutch is within the standard value.

Standard value: 0.3 – 0.6 mm

See the Following two pages.

MAGNETIC CLUTCH

DISASSEMBLY AND REASSEMBLY

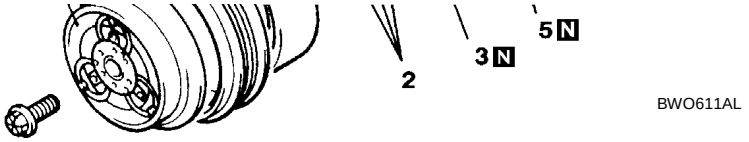

Magnetic clutch disassembly steps

"A ! "B !

- Air gap adjustement

1. Armature plate
2. Shims
3. Snap ring
4. Rotor
5. Snap ring
6. Clutch coil

"A !

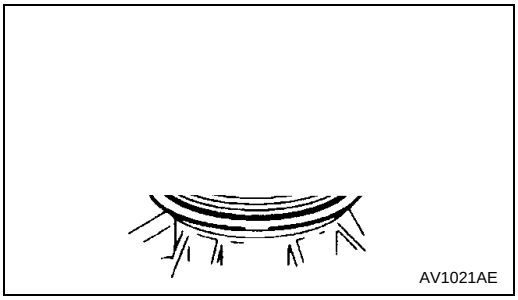

DISASSEMBLY SERVICE POINTS

"A ! ARMATURE PLATE REMOVAL

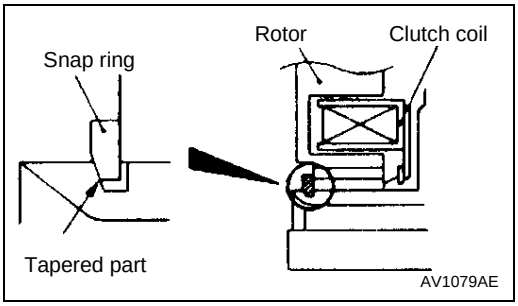

REASSEMBLY SERVICE POINTS

! A"SNAP RING INSTALLATION

Install the snap ring so that the tapered surface is at the outer side.

<Added>

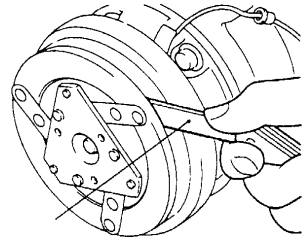

¡B" AIR GAP ADJUSTMENT

Check whether or not the air gap of the clutch is within the standard value.

Standard value: 0.3 – 0.6 mm
Note
If there is a deviation of the air gap from the standard value, make the necesarry adjustement by adjusting the number of shims.

<Added>